Precision Boring Head 205bh

metric

- **Setting accuracy 0,0025 mm/Ø**
- **Modular clamping system MSK**
- **High size accuracy**
- **High quality surface finish**

NAREX MTE®

narex®

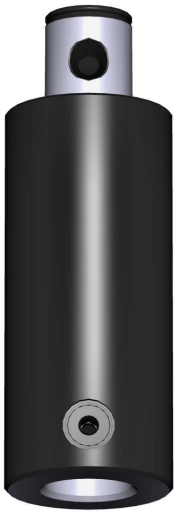

- **Modular clamping system MSK**

Working range:

Model 205bh – 100 (Ø 6 ÷ Ø 100, 9 working assemblies)
Model 205bh – 150 (Ø 10 ÷ Ø 150, 13 working assemblies)
Model 205bh – 240 (Ø 30 ÷ Ø 240, 14 working assemblies)

Application:

Precision boring of through and blind cylindric holes in accuracy grade IT6.

Use:

On all boring and milling machines with NC and CNC system or with manual control.

Advantages:

- increased boring productivity – using high cutting speeds
- large working range within one head model
- possibility of additonal balancing the working assembly
- coolant supply directly to the cutting insert
- simple preparation of working tool assembly
- easy adjustment of precise dimension
- low weight
- use of commonly available cutting inserts according to ISO standards

Properties:

Precision boring head meets all exacting requirements for use – accuracy, reliability, fast and easy manipulation, minimum breakdown rate.

- accuracy – fine adjustment by means of the scale reading 1 scale division = 0,0025 mm/Ø
- reliability – appropriate rigidity and dimensional stability of assembled tool

The boring head is clamped in exchangeable taper shanks or extension elements by means of modular clamping system MSK.

Delivery:

The precision boring head is packed in plastic case with foam plastic insert. The basic set is equipped with entire accessories for the total working range of the head.
The exchangeable taper shanks, extension elements and cutting inserts are not included in these accessories, it is necessary to order them separately.
If the head set for defined partial working range is ordered, then the relevant parts are delivered only. Screws and wrenches are delivered with every boring head set as standard.

Ordering method of a complete set:

- Code 205.380 - model 205bh – 100 (KIT)
- Code 205.519 - model 205bh – 150 (KIT)
- Code 205.618 - model 205bh – 240 (KIT)

Note:
Taper shanks, extension elements and spare screws are not included in the set.

Ordering method of partial set:

Model 205bh – 100 for working range 30 – 70 (without code)

Ordering method of partial items of set – examples:

- Code 203.881 - cutting insert (TPGT 080202L CN20) ..... 10 pcs
- Code 209.265 - taper shank MSK-AD34 BT-40 ..... 1 pc
- Code 210.056 - extension element EE MSK-AD34 – 50 ..... 1 pc
- Code 203.201 - boring tool (C) ..... 1 pc
- Code 300.078 - clamping screw (insert TPGT 080202L) ..... 2 pcs

Guarantee and service:

The manufacturer provides the guarantee service for 1 year from the day of purchased by user or 18 months by reseller. The manufacturer provides the customer service as well.

205bh-100

code 205.380
GENERAL BORING RANGE
Ø (6*) 10 - 100

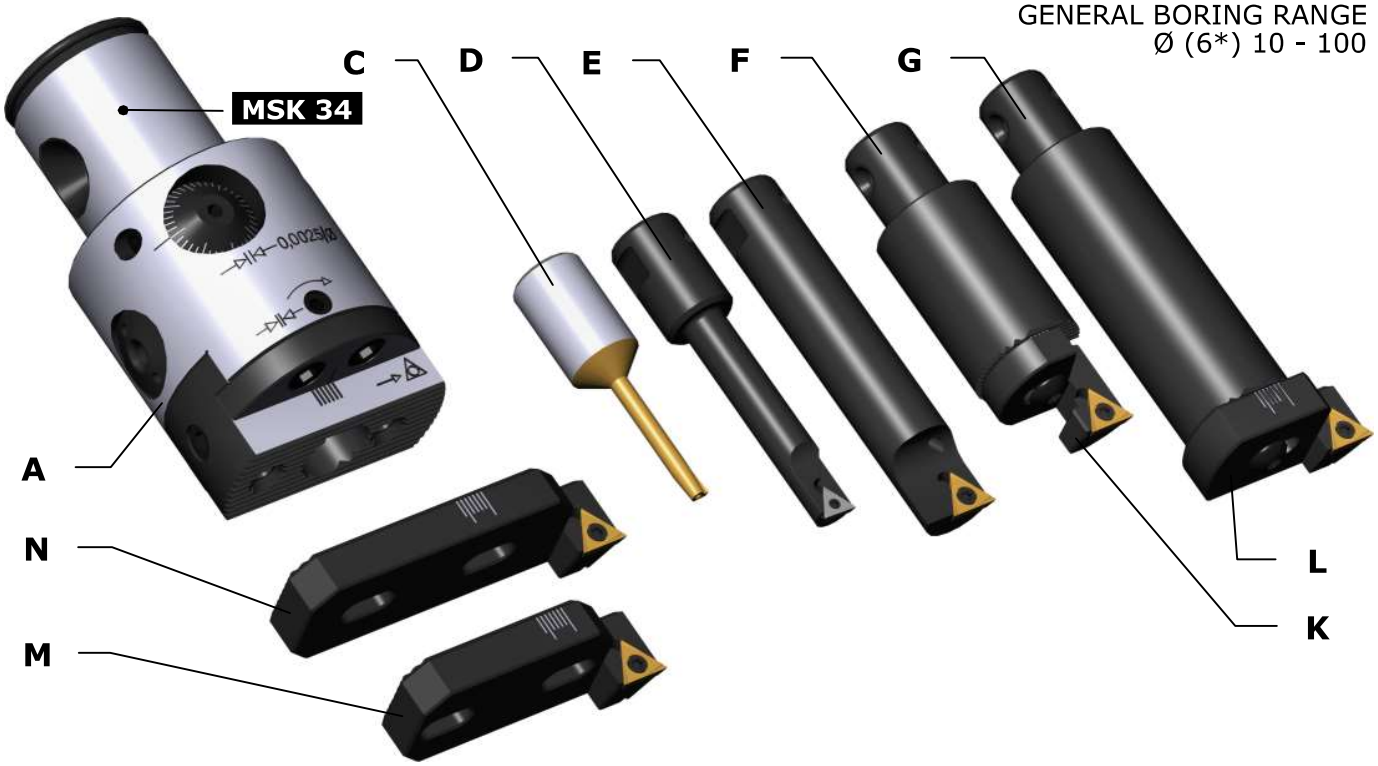

205.380 Tool sets (KIT)

	code			code	
1	205.151	A - Boring head	1	203.881	Inserts TPGT080202
1	203.201	C - Boring tool	5	203.935	Inserts TPGT110304
1	203.294	D - Boring tool	1	300.047	Screwdriver T6
1	203.805	E - Boring tool	1	300.061	Screwdriver T9
1	203.270	F - Holder	1	305.011	Key 3 NAREX
1	203.287	G - Holder	1	303.086	Key 4 (6H)
1	207.117	K - Cartridge	4	300.115	Screw M6-16
1	207.124	L - Cartridge	4	306.018	Washer 6.4
1	207.131	M - Cartridge	2	300.078	Screw M2-3.8 T6
1	207.148	N - Cartridge	5	300.108	Screw M3x0.5-7 T9

Cassette size: 340 x 280 x 80 mm
Cassette weight (KIT): 1.7 kg

* Boring tool C is delivered as non-standard accessories (page 7)

BASIC TECHNICAL DATA

Used elements		A C	A D	A E	A F(G) K	A F(G) L	A M	A N
Operating range (mm)	D_{min}	6	10	18	26	40	60	80
	D_{max}	14	18	26	40	60	80	100
	h_{max}	29	49	62	57 / 51	87 / 81	-	-
Weight (kg)	kg	1,11	1,11	1,16	1,18 (1,20)	1,22 (1,25)	1,15	1,18
Rpm (max)	n_{max}	6 000	6 000	5 000	3 500	2 500	1 500	1 000
Slide travel						4,5 mm		
Accuracy of adjustment						1 DIV = 0,0025 mm / ø		
Accuracy of boring						IT 6		
Type of taper shank						MSK 34 *p. 12*		

205bh – 100 code 205.380

GENERAL BORING RANGE
Ø 10 - 100

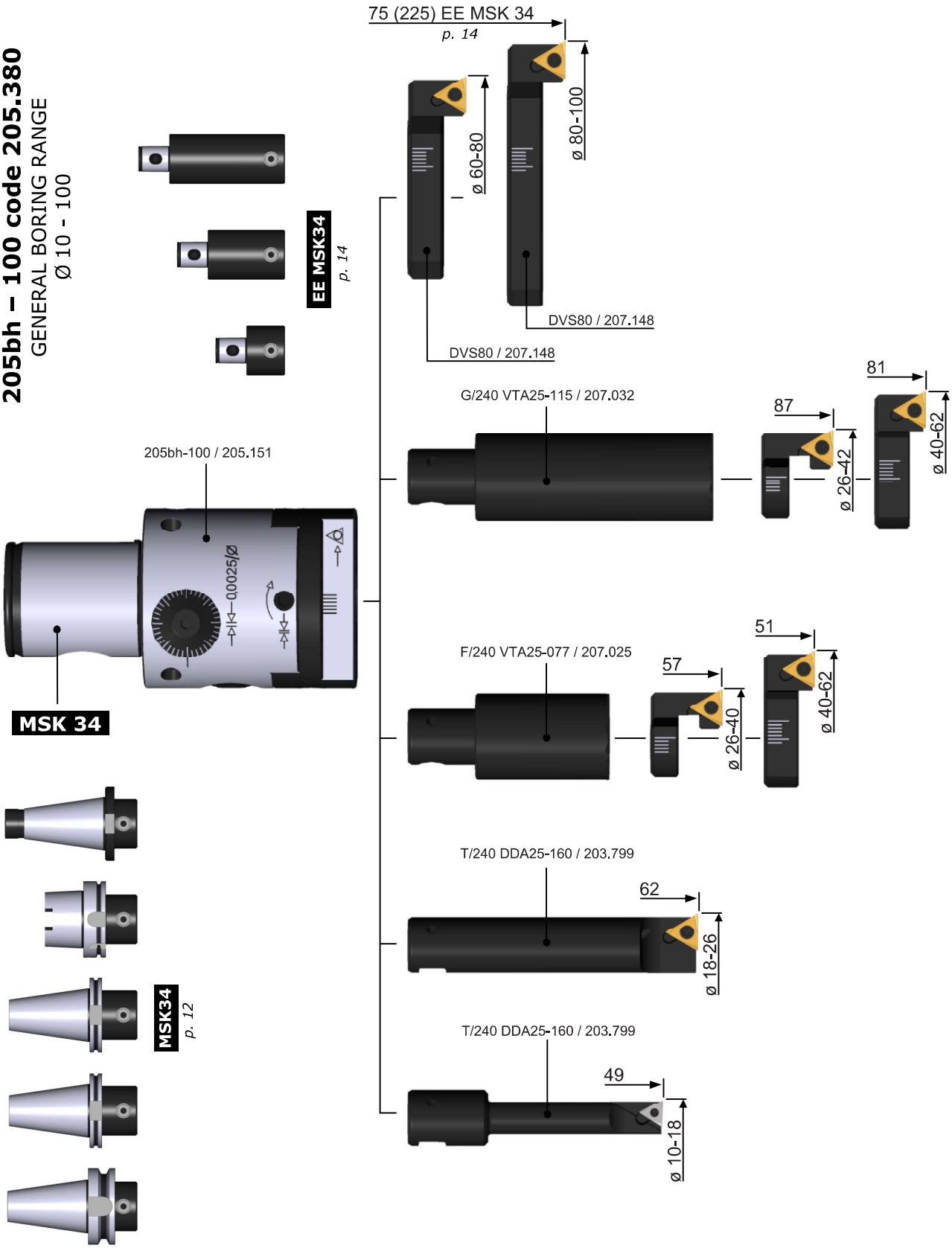

205bh-150

code 205.519
GENERAL BORING RANGE
Ø 10 – 150 mm

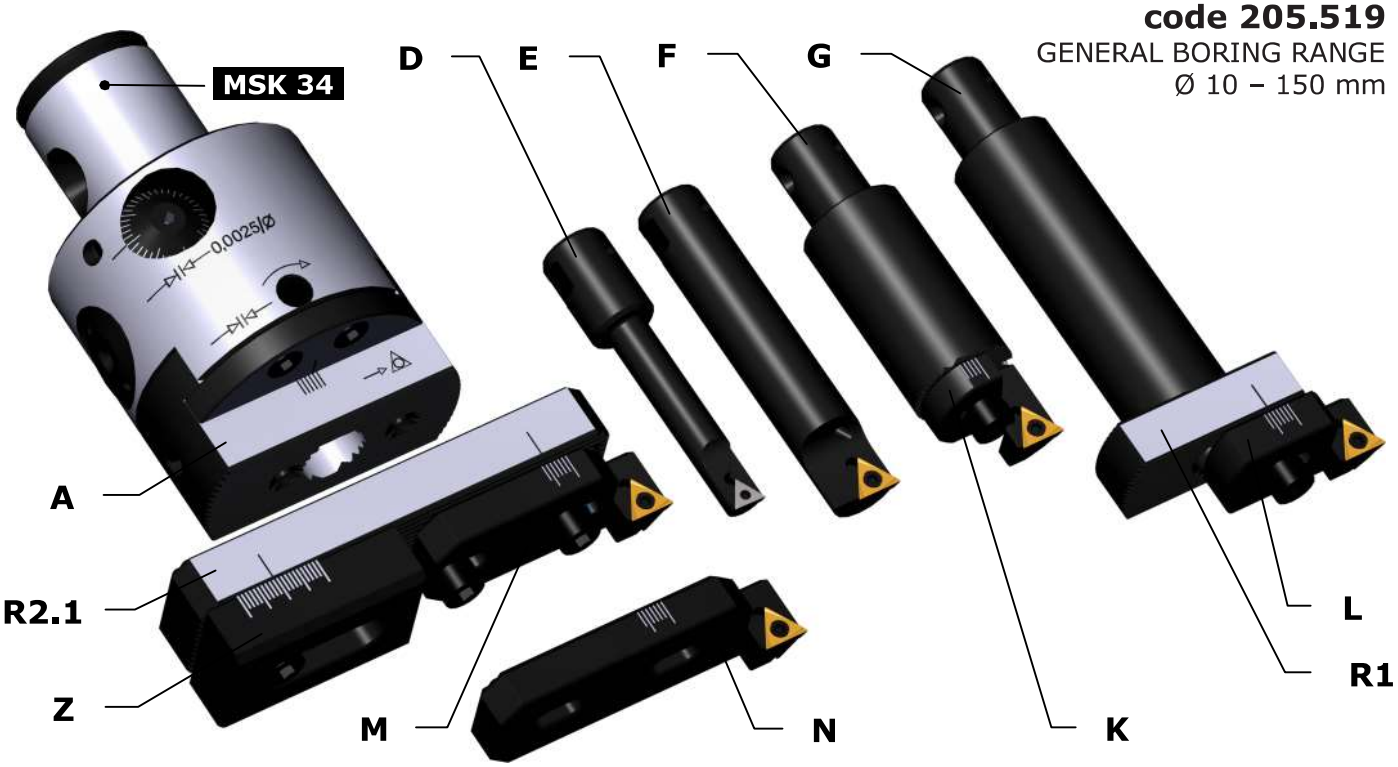

205.519 Tool sets (KIT)

	code			code	
1	205.502	A - Boring head	1	203.881	Inserts TPGT080202
1	203.294	D - Boring tool	5	203.935	Inserts TPGT110304
1	203.805	E - Boring tool	1	300.047	Screwdriver T6
1	207.001	F - Holder	1	300.061	Screwdriver T9
1	207.018	G - Holder	1	303.017	Key 4 NAREX
1	207.117	K - Cartridge	1	303.086	Key 4 (6H)
1	207.124	L - Cartridge	5	300.115	Screw M6-16
1	207.131	M - Cartridge	4	306.018	Washer 6.4
1	207.148	N - Cartridge	1	300.078	Screw M2-3.8 T6
1	207.049	R1 - Extension arm	5	300.108	Screw M3x0.5-7 T9
1	207.056	R2.1 - Extension arm	2	300.146	Screw M6-20
1	207.094	Z - Balance weight			

Cassette size: 340 x 280 x 80 mm
Cassette weight (KIT): 2.1 kg

BASIC TECHNICAL DATA

Used elements		A D	A E	A F(G) K	A F(G) L	A F(G) R1;K	A F(G) R1;L	A M	A N	A R2.1 M	A R2.1 N
Operating range (mm)	D_{min}	10	18	26	40	49	63	69	89	109	129
	D_{max}	20	28	42	62	65	85	91	111	131	151
	h_{max}	49	62	66/96	60/90	77/107	71/101	-	-	-	-
Weight (kg)	kg	1,75	1,80	1,92 (1,94)	2,02 (2,04)	2,00 (2,03)	2,11 (2,13)	1,79	1,82	2,09	2,12
Rpm (max)	n_{max}	6000	5000	3500	2500	2000	1500	1500	1100	950	800
Slide travel								5 mm			
Accuracy of adjustment								1 DIV = 0,0025 mm / ø			
Accuracy of boring								IT 6			
Type of taper shank								MSK 34 *p. 12*			

205bh-150 code 205.519

GENERAL BORING RANGE
Ø 10 – 150 mm

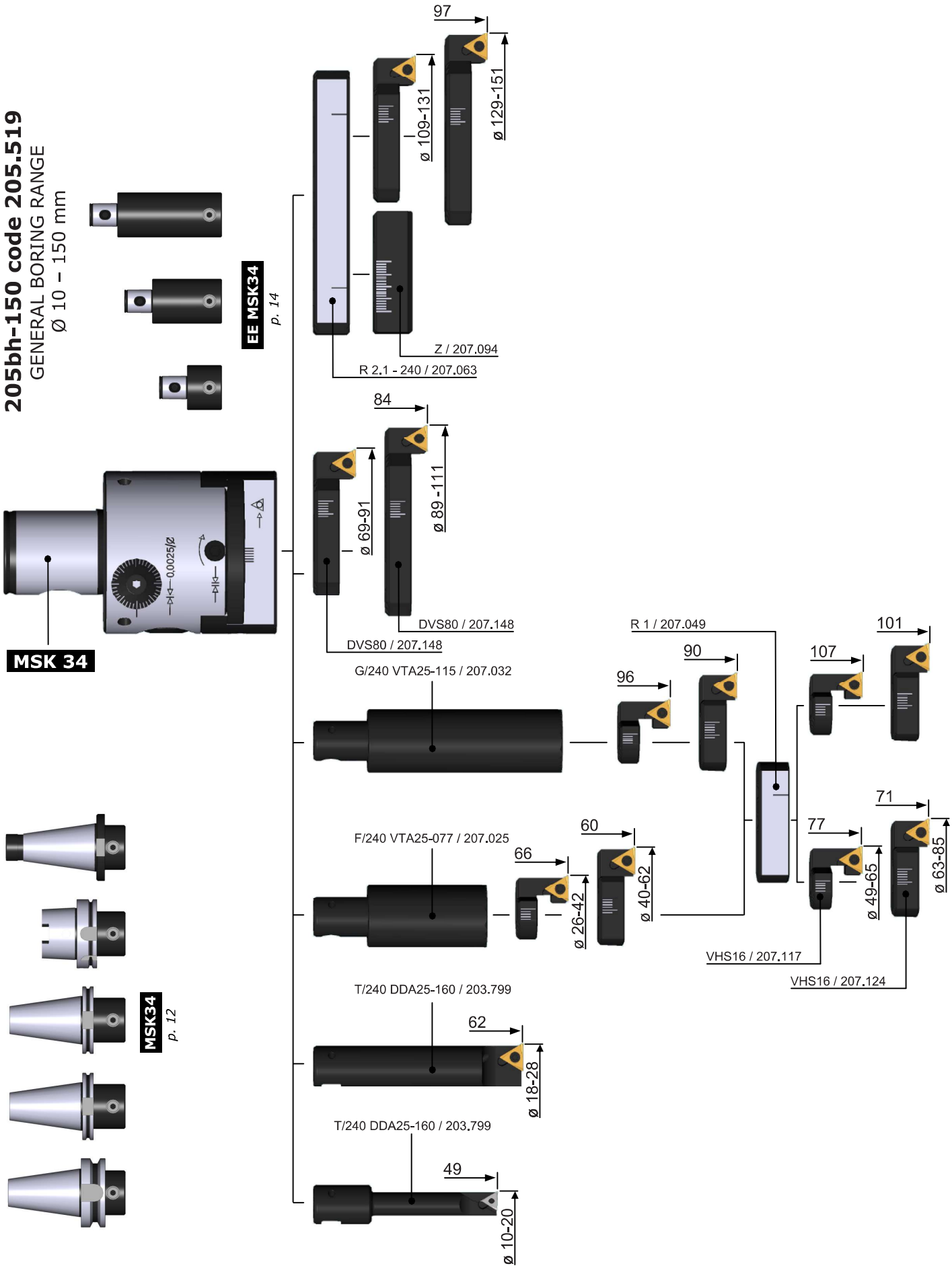

205bh-240

code 205.618
GENERAL BORING RANGE
Ø 30 – 240 mm

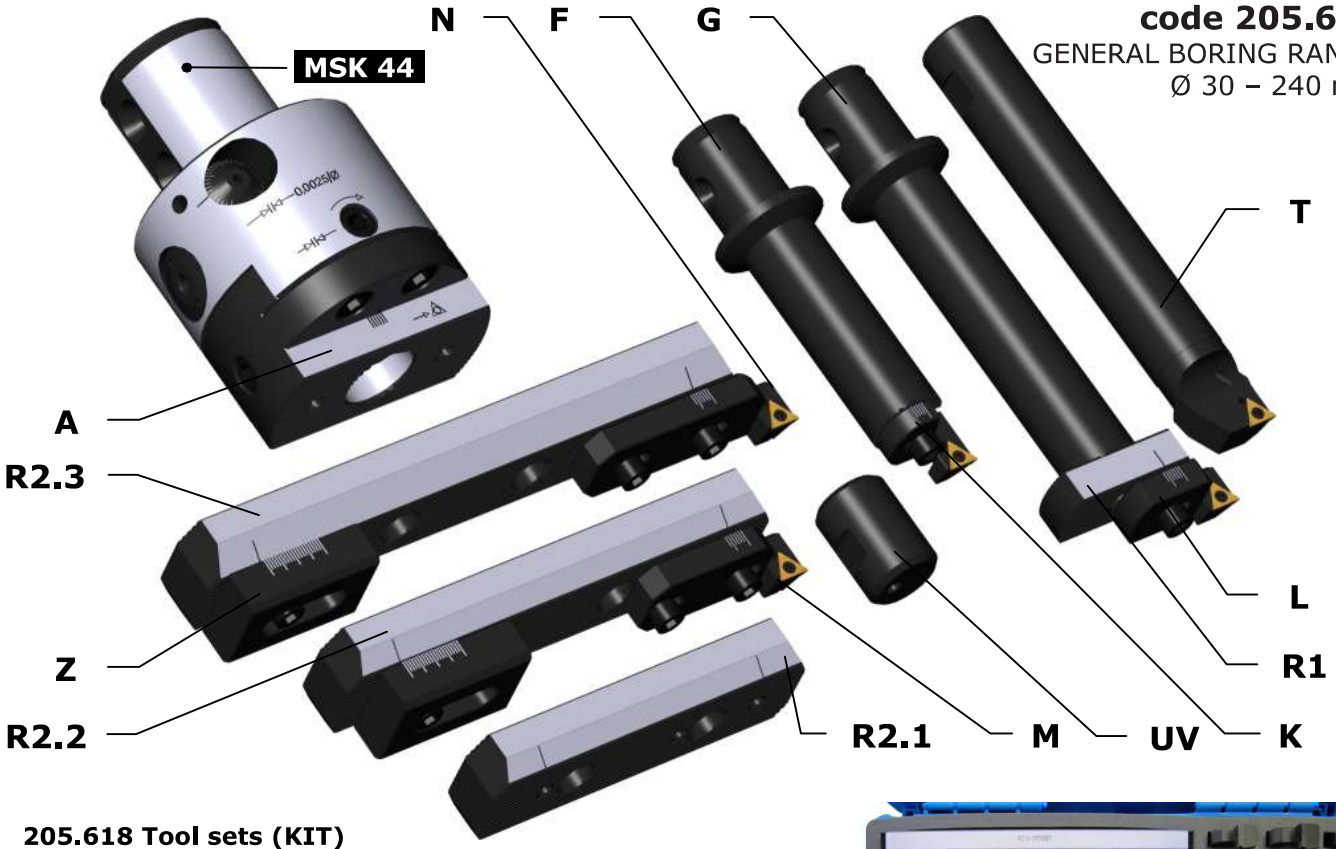

205.618 Tool sets (KIT)

	code	
1	205.608	A - Boring head
1	203.799	T - Boring tool
1	207.025	F - Holder
1	207.032	G - Holder
1	207.124	L - Cartridge
1	207.131	M - Cartridge
1	207.148	N - Cartridge
1	207.049	R1 - Extension arm
1	207.063	R2.1 - Extension arm
1	207.070	R2.2 - Extension arm
1	207.087	R2.3 - Extension arm
1	207.094	Z - Balance weight
1	301.044	RP - Reduction sleeve

	code	
1	207.100	UV - Plug
4	203.935	Inserts TPGT110304
1	300.061	Screwdriver T9
1	303.017	Key 4 NAREX
1	303.109	Key 6 (6H)
4	300.115	Screw M6-16
1	300.122	Screw M6-35
2	300.139	Screw M8-16
4	306.018	Washer 6.4
4	300.108	Screw M3x0.5-7 T9

Cassette size: 340 x 280 x 80 mm
Cassette weight (KIT): 8.0 kg

BASIC TECHNICAL DATA

Used elements		A T	A F(G) L	A F(G) R1;L	A UV M	A UV N	A R2.2 M	A R2.2 N	A R2.3 M	A R2.3 N	A R2.4 M	A R2.4 N
Operating range (mm)	D_{min}	30	40	63	84	104	123	143	165	185	205	225
	D_{max}	40	63	85	106	126	145	165	187	207	227	247
	h_{max}	124	92/132	103/143	-	-	-	-	-	-	-	-
Weight (kg)	kg	3,59	3,51 (3,65)	3,60 (3,74)	3,31	3,34	3,66	3,69	3,85	3,88	4,11	4,14
Rpm (max)	n_{max}	3500	2000	1300	1000	850	750	650	580	530	480	460
Slide travel									5 mm			
Accuracy of adjustment									1 DIV = 0,0025 mm / ø			
Accuracy of boring									IT 6			
Type of taper shank									MSK 44 *p. 12*			

205bh-240 code 205.618

GENERAL BORING RANGE
Ø 30 – 240 mm

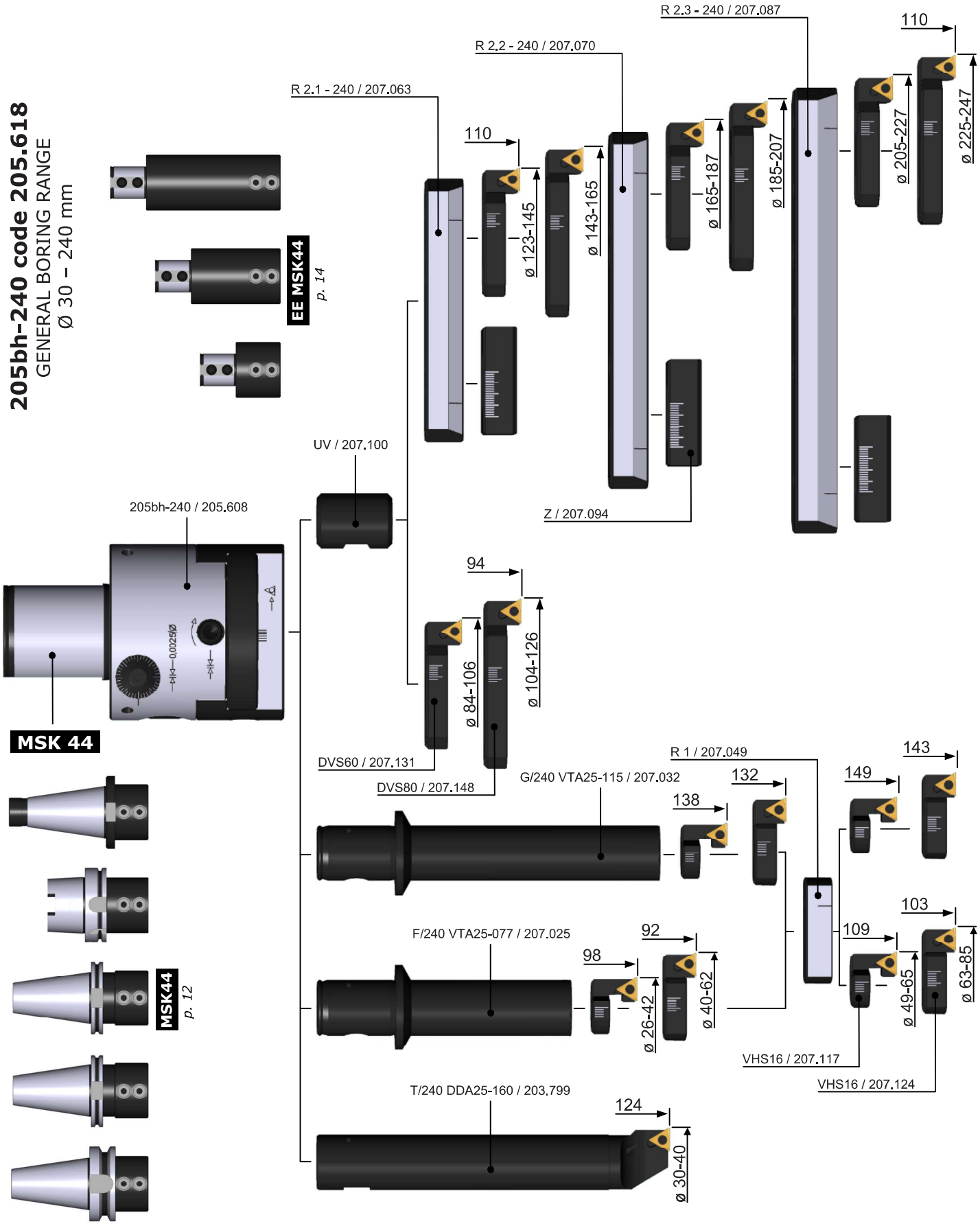

205bh-240/420

code 205.694

GENERAL BORING RANGE

Ø 245 – 425 mm

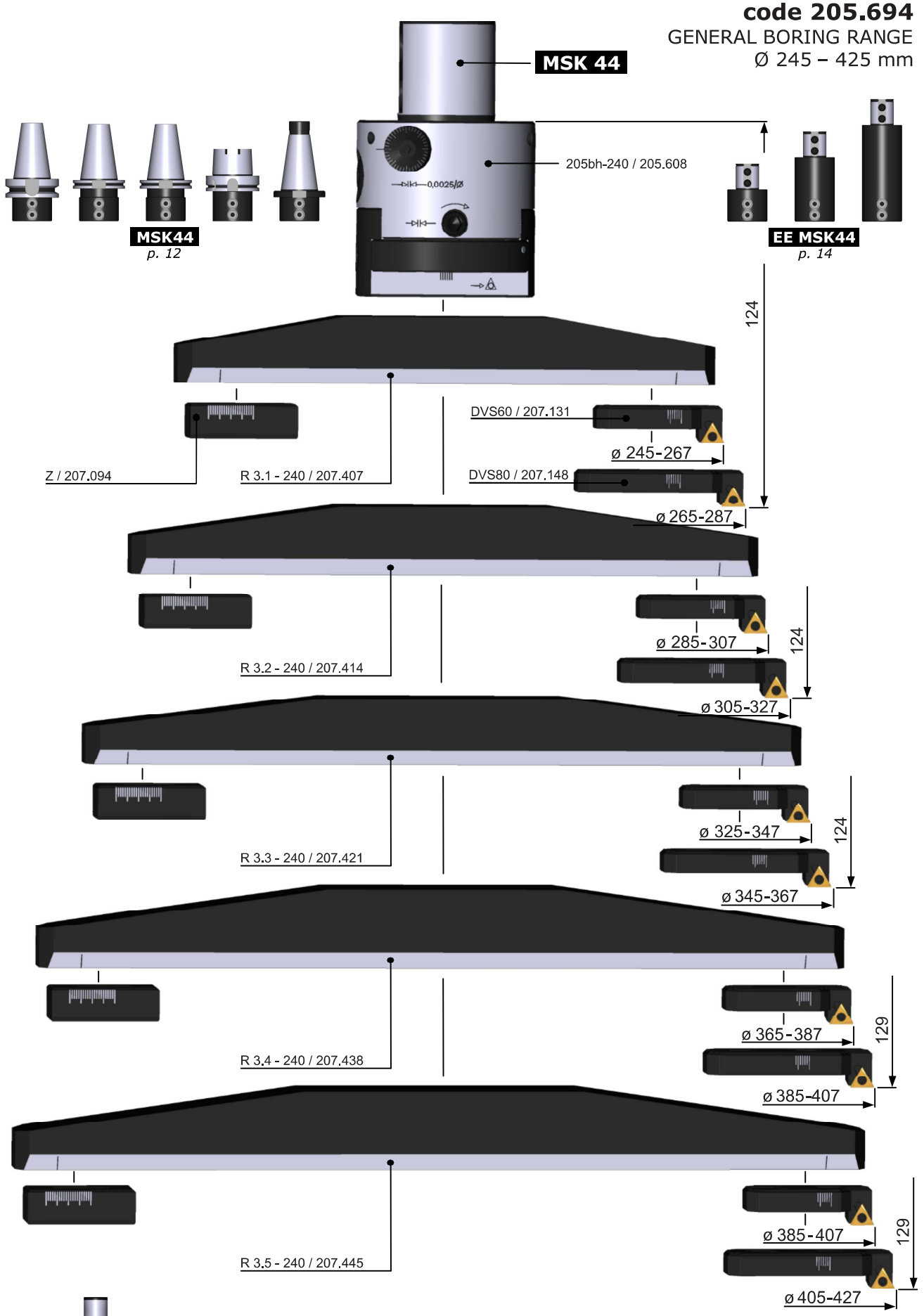

F,G Holder

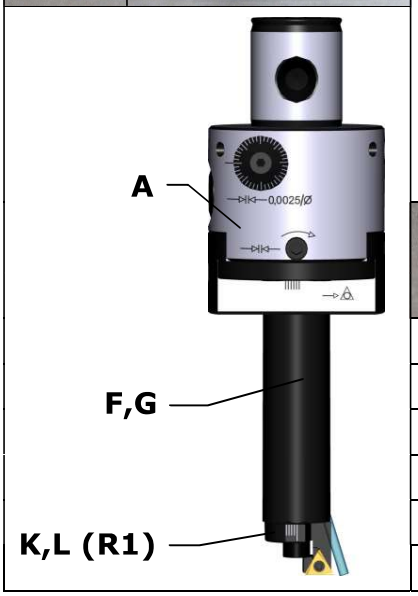

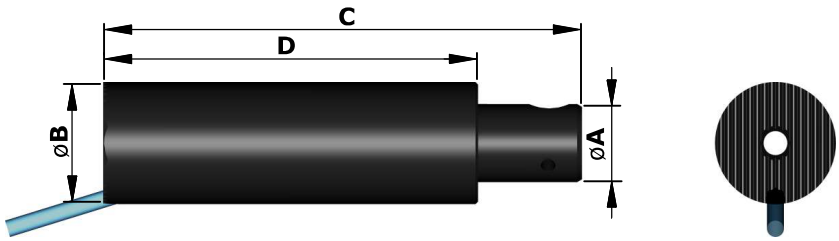

Type		Code	Dimensions (mm)				kg
			øA	øB	C	D	kg
F/ 100	VTA16-038-1,5	**203.270**	16	24	58	38	0,095
F/ 150	VTA16-047-1,5	**207.001**	16	25	69	47	0,19
F/ 240	VTA25-072-1,5	**207.025**	25	25	115	72	0,36
G/ 100	VTA16-068-1,5	**203.287**	16	24	88	68	0,13
G/ 150	VTA16-077-1,5	**207.018**	16	25	99	77	0,29
G/ 240	VTA25-112-1,5	**207.032**	25	25	155	112	0,50

C, D, E, T Boring tool

C

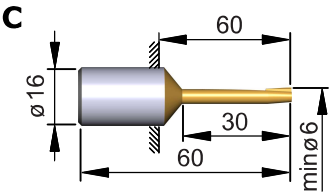

Code	Type	kg
203.201	VPS16-062 FCR K10 TiN HF65800550	0,05

Non-standard accesssories for model 205bh – 100. Brazed cutting insert with positive edge geometry, TiN-coated, designed for hole boring from Ø 6 mm. Minimum depth of cut 0,05 mm, maximum 0,25 mm. For uninterrupted cut.

D

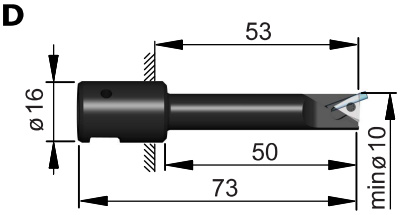

Code	Type	D MIN	kg
203.294	DDA16-073STFPR08	10 mm	0,05

Standard accesssories for models 205bh–100 and 205bh–150. The boring tool is fitted with triangular cutting insert with 3 edges and small corner radius – TPGT 080202L. This geometry enables precision boring with small depth of cut as well. Recommended depth of cut is 0,1 - 0,25 mm.

E

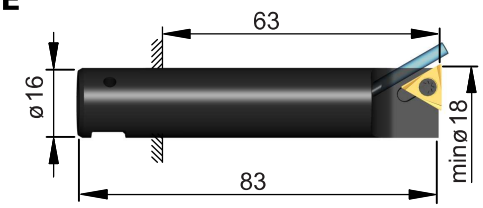

Code	Type	D MIN	kg
203.805	DDA16-083STFPR11	18 mm	0,10

Standard accesssories for models 205bh–100 and 205bh–150. The boring tool is fitted with triangular cutting insert with 3 edges and small corner radius – TPGT 110304L. This geometry enables precision boring with small depth of cut as well. Recommended depth of cut is 0,1 - 0,25 mm.

T

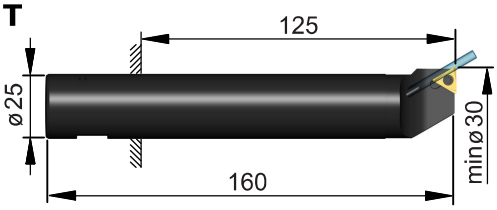

Code	Type	D MIN	kg
203.799	DDA25-160STFPR11	30 mm	0,49

Standard accesssories for model 205bh – 240. The boring tool is fitted with triangular cutting insert with 3 edges and small corner radius – TPGT 110304L. This geometry enables precision boring with small depth of cut as well. Recommended depth of cut is 0,1 - 0,25 mm.

K, L, M, N — Insert Holders

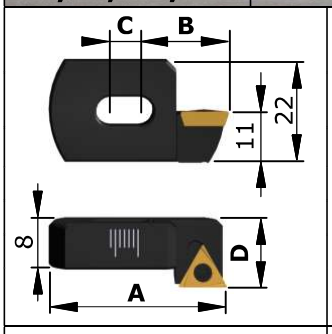

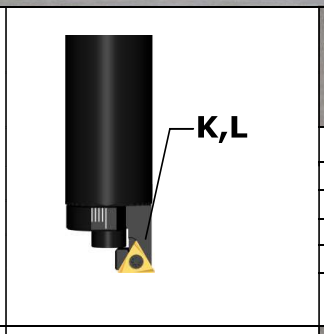

Type ▶▶	K VHS16-1.5STFPR11-26	L VHS16-1.5STFPR11-40
Code	**207.117**	**207.124**
A (mm)	25	39
B (mm)	12,5	19,5
C (mm)	3,2	6,2
D (mm)	20	14
kg	0,025 kg	0,045 kg

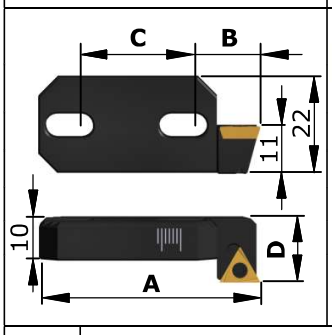

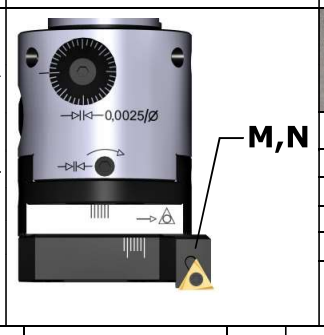

Type ▶▶	M DVS60-020STFP11-20	N DVS80-020STF11-20
Code	**207.131**	**207.148**
A (mm)	57,5	75,5
B (mm)	16,5	26,5
C (mm)	30	30
D (mm)	16	16
kg	0,09 kg	0,12 kg

TPGT 110202L CN20	Code: **203.911**		M2-3.8 FTNA0238	**300.078**		TORX 6	**300.047**
TPGT 110202L H01	Code: **203.928**		M3x0.5-7 FTNA0307	**300.108**		TORX 9	**300.061**

B — Taper shank

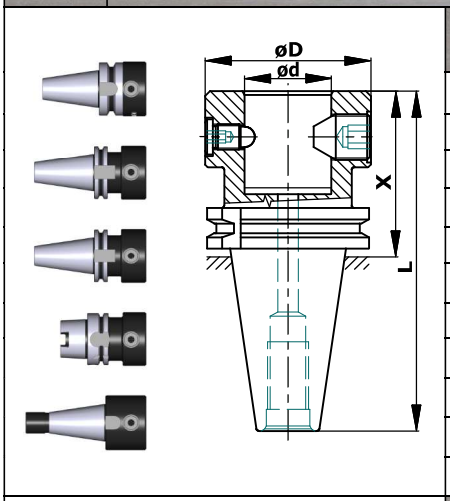

Code	Type **MSK 34**	ød mm	øD mm	L mm	X mm	kg
209.227	MSK-AD34 ISO 40 DIN 69871 AD	34	63	133	65	1,7
209.234	MSK-AD34 ISO 50 DIN 69871 AD			150	48	3,7
209.241	MSK-AD34 ISO 40 DIN 2080			139	45	1,2
209.258	MSK-AD34 ISO 50 DIN 2080			172	45	3,5
209.265	MSK-AD34 MAS-BT 40			121	55	1,6
209.272	MSK-AD34 MAS-BT 50			168	66	4,1
209.289	MSK-AD34 CAT 40			133	65	1,7
209.296	MSK-AD34 CAT 50			150	48	3,7
209.340	MSK-AD34 HSK A63			102	70	1,8
209.357	MSK-AD34 HSK A100			120	70	2,5
PSC	MSK-AD34 PSC ISO 26623-1					

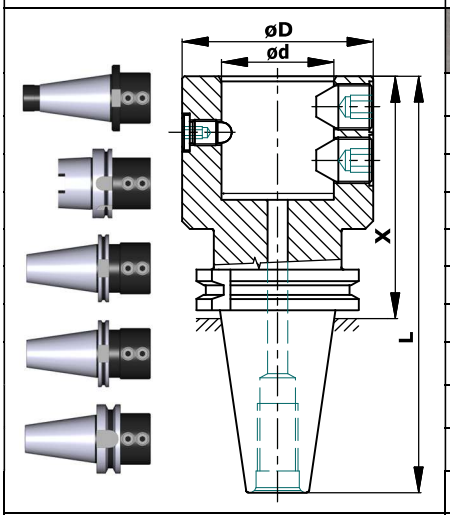

Code	Type **MSK 44**	ød mm	øD mm	L mm	X mm	kg
209.425	MSK-AD44 ISO 40 DIN 69871 AD	44	75	163	95	2,6
209.432	MSK-AD44 ISO 50 DIN 69871 AD			182	80	4,0
209.449	MSK-AD44 ISO 40 DIN 2080			173	80	1,9
209.456	MSK-AD44 ISO 50 DIN 2080			207	80	3,8
209.463	MSK-AD44 MAS-BT 40			145	80	2,1
209.470	MSK-AD44 MAS-BT 50			184	82	4,5
209.487	MSK-AD44 CAT 40			163	95	2,6
209.494	MSK-AD44 CAT 50			182	80	4,0
209.548	MSK-AD44 HSK A63			119	70	3,7
209.555	MSK-AD44 HSK A100			137	70	5,0
PSC	MSK-AD44 PSC ISO 26623-1					

A Precision Boring Head (mm)

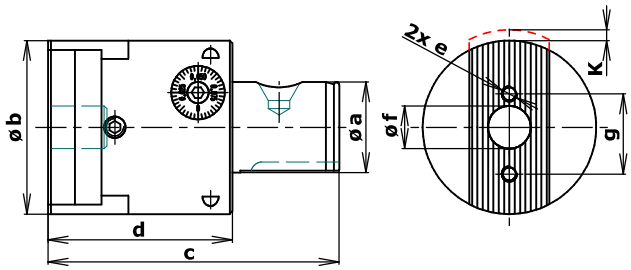

Model	Code	Dimensions (mm)								kg
		Ø a	Ø b	Ø f	c	d	g	e	k	
205bh – 100	**205.151**	34	52	16	101	61	30	M6	4,5	1,1
205bh – 150	**205.502**	34	65	16	109	69	30	M6	4,5	1,7
205bh – 240	**205.601**	44	80	25	123	79	50	M6/M8	5,0	3,1

R2 Extension arm

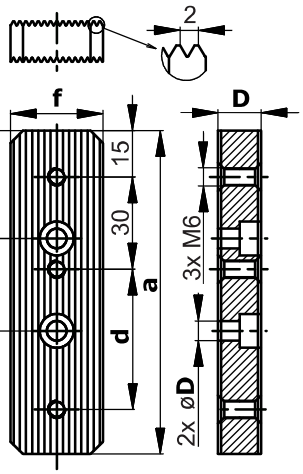

Type	Code	Dimensions (mm)							kg
		a	b	c	d	e	f	øD	
R 2.1 – 150	**207.056**	105	35	14	45	30	30	6,4	0,30
R 2.1 – 240	**207.063**	119	34,5	17	51	50	38	8,4	0,47
R 2.2 – 240	**207.070**	161	55,5	17	91,5	50	38	8,4	0,65
R 2.3 – 240	**207.087**	201	75,5	19	131,5	50	38	8,4	0,92

R1 Extension arm

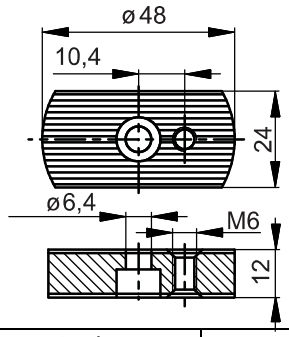

Code: **207.049** 0,085 kg

Z Balance weight

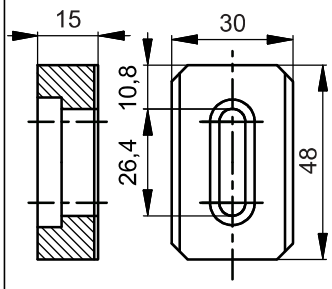

Code: **207.094** 0,135 kg

UV Plug

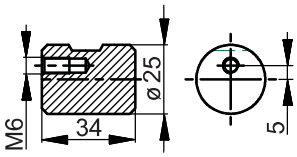

Code: **207.100** 0,115 kg

RP Reduction sleeve

Ø 25 / 16 (mm)

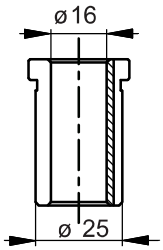

Code: **301.044** 0,098 kg

EE Extension element

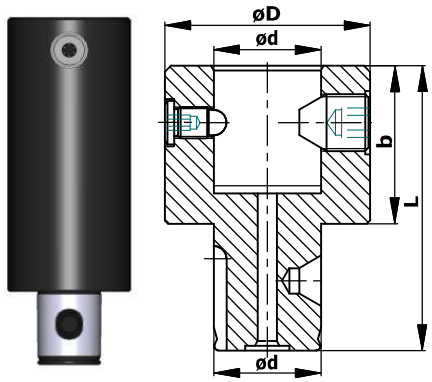

Code	Type MSK 34	ød	øD	L	b	kg
		(mm)				
210.056	EE MSK-AD34/34 - 50	34	65	90	50	1,2
210.063	EE MSK-AD34/34 - 100			140	100	2,5
210.070	EE MSK-AD34/34 - 150			190	150	3,8

Code	Type MSK 44	ød	øD	L	b	kg
		(mm)				
210.100	EE MSK-AD44/44 - 60	44	75	108	60	2,0
210.117	EE MSK-AD44/44 - 120			168	120	4,0
210.124	EE MSK-AD44/44 - 180			228	180	6,1

Exchangeable inserts - manufacturer **CUTTING TOOLS KORLOY**

TPGT **▲60°**
Positive relief angle 11°

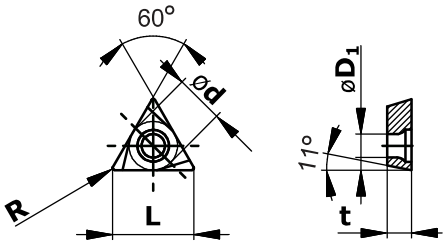

Inserts CUTTING TOOLS KORLOY are delivered according to the custom requirement in category CN20 or H01, unit pack 10 pcs or individually. [mm]

Code	Type of Inserts	R	l	d	D_1	t
203.881	TPGT 080202L CN20	0,2	7,7	4,76	2,3	2,38
203.904	TPGT 080202L H01	0,2				
203.935	TPGT 110304L CN20	0,4	10,5	6,35	3,4	3,18
203.942	TPGT 110304L H01	0,4				

Cutting condition for precision boring

	Workpiece	v_c	f_n	a_p
CN20 (Cermet)	**P** - Steel	120 ÷ 200	0,03 ÷ 0,06	0,05 ÷ 0,4
H01 (Uncoated)	**K** - Iron	100 ÷ 200		
	N - Cu + alloy	150 ÷ 300		
	N - Al + alloy	300 ÷ 500		

v_c - Cutting speed (mm / min) f_n - Feed rate (mm / rev.) a_p – Depth of cut (mm)

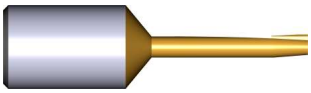

Cutting conditions for precision boring

Workpiece	v_c (mm / min)	f_n (mm / rev.)	a_p (mm)
P - Steel	80 ÷ 120	0,03 ÷ 0,06	0,05 ÷ 0,30
K - Cast Iron HB < 200	110 ÷ 180		
N - Cu - alloy	110 ÷ 180		
N - Al - alloy	160 ÷ 200		

TCT *symmetric*

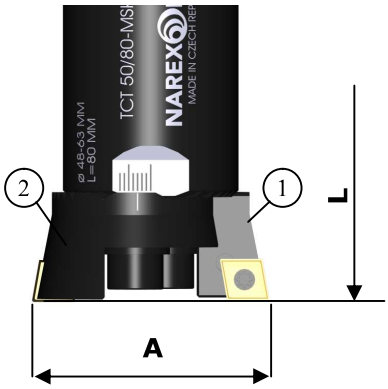

TCT-AS *asymmetric*

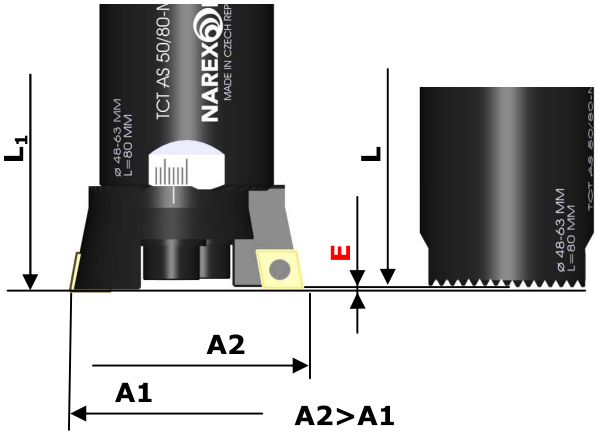

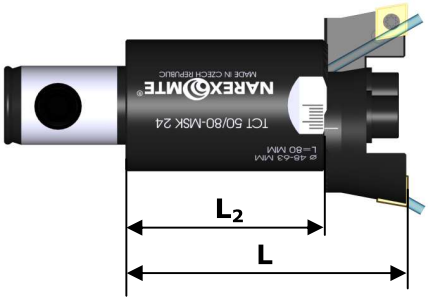

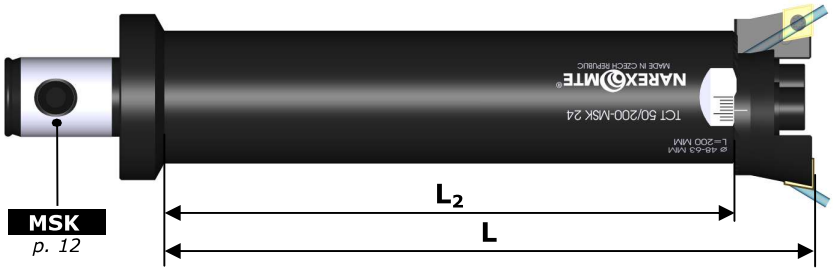

TCT *(symmetric)*

Code	Type	Boring range **A**	**L** [mm]	**L_2** [mm]	Insert holder (set) ①②
206.202	TCT 50/80 – MSK 24	48-63	80	50	206.325-2.5 CCMT 09T308
206.219	TCT 50/200 – MSK 24	48-63	200	170	206.325 2.5 CCMT 09T308
206.226	TCT 60/85 – MSK 24	60-80	85	51	206.332 3.0 CCMT 120408
206.233	TCT 80/100 – MSK 34	76-110	100	63	206.349 3.0 CCMT 120408
206.240	TCT 110/115 – MSK 44	105-160	115	78	206.356 3.0 CCMT 120408

TCT -AS *(asymmetric)*

Code	Type	Boring range **A2**	**L** [mm]	**L_1** [mm]	**E** [mm]	**L_2** [mm]	Insert holder (set) ①②
206.264	TCT-AS 50/80–MSK 24	48-63	80	79.7	0.3	50	206.325-2.5 CCMT 09T308
206.271	TCT-AS 50/200–MSK 24	48-63	200	199.7	0.3	170	206.325 2.5 CCMT 09T308
206.288	TCT-AS 60/85–MSK 24	60-80	85	84.7	0.3	51	206.332 3.0 CCMT 120408
206.295	TCT-AS 80/100–MSK 34	76-110	100	99.6	0.4	63	206.349 3.0 CCMT 120408
206.301	TCT-AS 110/115–MSK 44	105-160	115	114.6	0.4	78	206.356 3.0 CCMT 120408

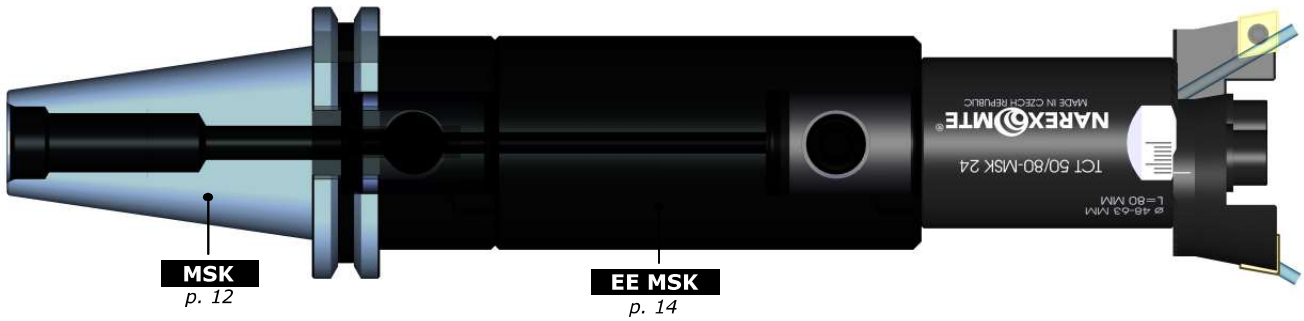

NAREX MTE®

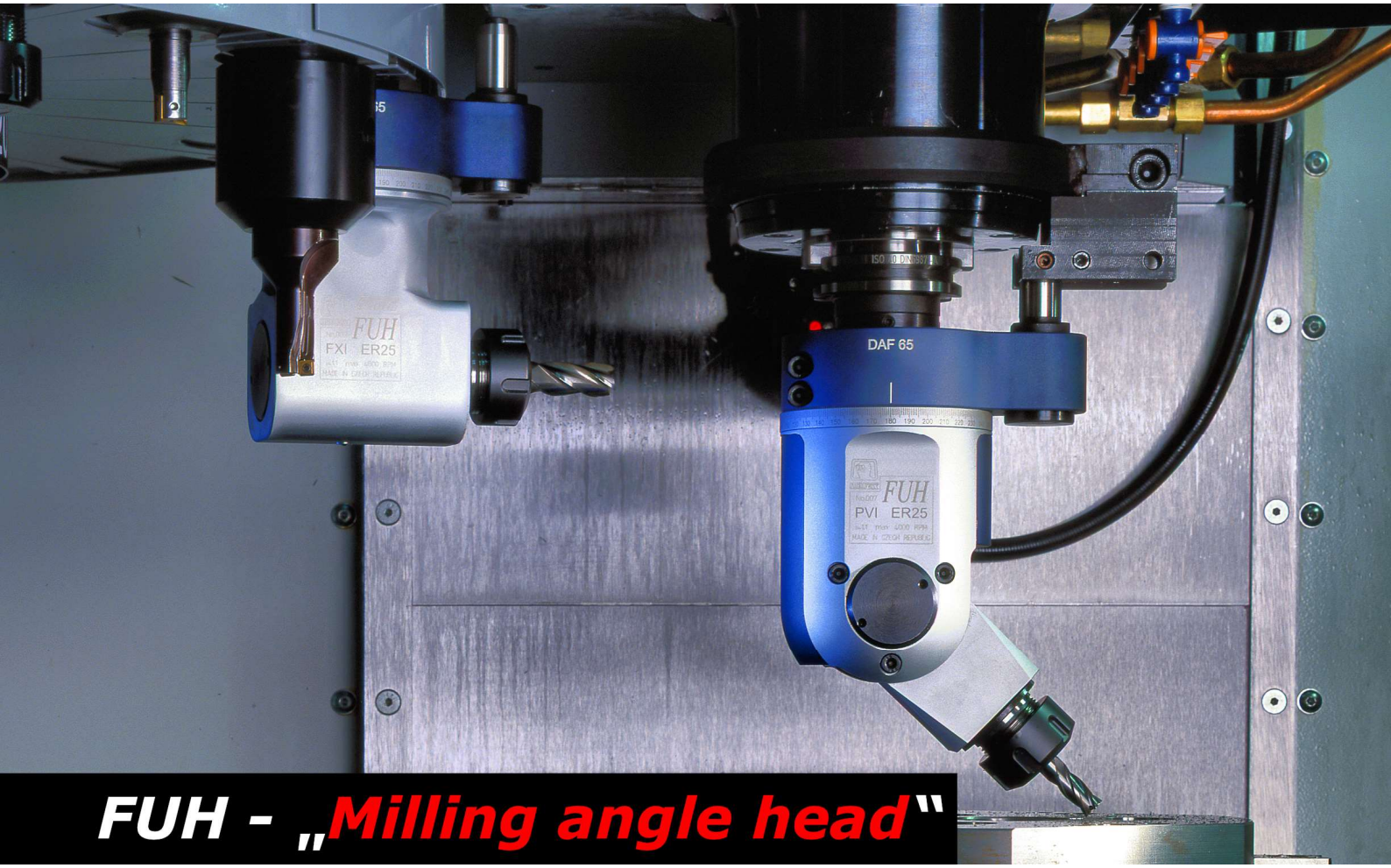

FUH - „Milling angle head"

NAREX MTE s.r.o.
Kreslicka 1
CZ-101 00 Prague
Czech Republic

phone: +420 725 551 171
+420 602 675 763
e-mail: sales@narexmte.cz
www.narexmte.cz